Albeo® LED Luminaires

Heavy Industrial High Bay & Low Bay Lighting | ABR2 series

CUSTOMER NAME _____

Project Name _____

Date _____ Type _____

Catalog Number _____

The **Albeo® ABR2** LED luminaire is an IP66 rated fixture for demanding industrial environments with high ambient temperatures and wet applications. Utilizing a sealed form factor, the ABR2-Series offers customers a rugged design with exceptional performance and high reliability.

CONSTRUCTION

Housing:	Cast A380 Aluminum
Lens:	Polycarbonate or Glass
Paint:	Polyester powder coat with passivation layer
Weight:	21–49lbs (9.53–22.23kg)
Optical Assembly:	Reflective optics with flat lens

OPTICAL SYSTEM

Lumens:	9000–60000
Distribution:	120°, 90°, 55°, 30°, Glass, Clear PC, and Diffused lens options
Efficacy:	Up to 175LPW
CCT:	4000K & 5000K
CRI:	70 & 80

ELECTRICAL

Input Voltage:	120–277V, 347V, & 480V
Input Frequency:	50/60Hz
Power Factor (PF):	>90%*
Total Harmonic Distortion (THD)*:	<20%*
EMI:	Title 47 CFR 15 Class A
Surge Protection:	• For 120–277VAC per IEEE/ANSI C62.41.-1991, 3kV/3kA Location Category B3 • For 347/480VAC per IEEE/ANSI C62.41.-1991, 6kV/3kA Location Category B3 • Optional for 120–480V per IEEE/ANSI C62.41.-1991, 10kV/5kA Location Category B3
LED Driver Type:	Class 1

* PF and THD may vary with options

CONTROLS

Dimming:	Standard 0–10VDC,10%
Sensors:	• **Wattstopper FSP211**: Motion, Daylight, Hi-Low Dimming, and IR config (IR remote sold separately ◦ **Wattstopper FSP remote:** SKU# 93076263). • **WHS100:** Wireless Zigbee DaintreeTM with Motion Sensor

AMBIENT TEMPERATURE

TYPE	TEMPERATURE RATE
OPERATING TEMPERATURE	–30°C to +65°C

LUMEN MAINTENANCE

LXX (10K) @ HOURS 100,000 HR
L70

MOUNTING

- **Typical Mounting:**
  - Standard Chain/Cable mount ready.
  - Threaded Rod, Pendant Mount, Hook, and Loop kits optional for all configurations.
  - Rotatable Bracket optional for single module (1S) configurations only.
- **Cord & Plugs:**
  - Knockout Access—no cord, no plug, available with 23 (Pendant) mounting only.
  - 6 ft, 12 ft, 15 ft, 20 ft cord options.
  - 15A or 20A, straight or twist lock plug (Damp rated).

DESIGN LIFE & WARRANTY

- UL 1598 Suitable for Wet Locations (IP66)
- **Safety:**
  - UL/cUL Listed
  - UL 8750 LED Equipment in Lighting Products
  - UL 1598A Inside Drip Proof-Type
- Packaging: Standard job pack contain 7–21 fixtures. Orders of <14 are typically single pack.
- **Current's Limited 5-year Warranty:**
  Please refer to **ALB048** in Product Downloads section at: https://products.gecurrent.com

GE current
a Daintree company

5 YEAR WARRANTY · WET RATED · DIMMABLE · IP66 · DLC LISTED · RoHS COMPLIANT · TAA COMPLIANT · c UL us LISTED · NEMA 4X Certified

Albeo® LED Luminaires

ARC series | LED IP65 Round High Bay

Ordering Information

CUSTOMER NAME

Project Name ______________________

Date ______________ Type ______________

Catalog Number ______________________

Ordering Information:

ABR2

_ _

PRODUCT ID	VOLTAGE[1]	LUMEN OUTPUT	PERFORMANCE LEVEL	CCT/CRI	OPTICS/LENS	CONTROLS	MOUNTING	CORD	PLUG	FINISH	OPTIONS
ABR2 = Albeo® High Bay	**0** = 120–277V **1** = 120 **4** = 277 **D** = 347 **5** = 480	**09** = 9,000lm **12** = 12,000lm **15** = 15,000lm **8** = 18,000lm **24** = 24,000lm **30** = 30,000lm **36** = 36,000lm **48** = 48,000lm **60** = 60,000lm	**T** = Standard **H** = High	**70 CRI** **47** = 4000k **57** = 5000k **80 CRI** **48** = 4000k **58** = 5000k	**1G** = 120° Glass **9G** = 90° Glass **5G** = 55° Glass **3G** = 30° Glass **1C** = 120° Clear PC **9C** =90° Clear PC **5C** =55° Clear PC **3C** =30° Clear PC **1D** =120° Diffuse PC	**QQ** = None **QV** = 0-10V Control Wires **2Q**[4] = Motion Sensor w/ Daylight, High-Low Dimming, and IR Remote Adjustable (IR remote SKU #93076263 sold separately to modify default settings) **4Q**[5] = Wireless ZigBee Daintree® Enabled w/ Motion Sensor	**ST** =Chain/Cable **22** =1/2" Threaded Rod Mount Kit **23** = 3/4" Pendant Mount Kit **HK** = Hook **LP** = Loop **41** = 5 ft. Y-Cable/Hook **42** = 10 ft. Y-Cable/Hook **43** = 15 ft. Y-Cable/Hook **44** = 20 ft. Y-Cable/Hook **RB**[2] = Rotatable Bracket	**K**[3] = Knockout **A** = 6ft. 18ga cord **B** = 12ft. 18ga cord **C** = 15ft. 18ga cord **D** = 20ft. 18ga cord	**Q** = None **A** = 15A Straight Plug **B** = 20A Straight Plug **C** = 15A Twist Lock **D** = 20A Twist Lock	**W** = White Powder Coat **R** = Corrosion Resistant	**1PK** = Single Pack for distributor stocking. Default is job pack. **10K** = 10kV Surge

70 CRI @ 4000K OR 5000K CCT

LUMEN PACKAGE	OUTPUT LEVEL	TYPICAL DELIVERED LUMENS	TYPICAL POWER		TYPICAL LPW 120–277V	MAX AMBIENT TEMP (°C)		MODULE BODY
			120–277V	347–480V		120–277V	347–480V	
09	T	9,100	55	58	165	60	60	1S
09	H	9,100	51	54	178	65	65	1S
12	T	12,100	75	79	161	60	60	1S
12	H	12,100	68	72	178	65	65	1S
15	T	15,100	98	100	154	60	60	1S
15	H	15,100	87	90	174	65	65	1S
18	T	18,000	124	123	145	60	60	1S
18	H	18,000	106	107	170	65	65	1S
4	T	24,200	176	176	138	60	60	1S
24	H	24,200	138	137	175	65	65	1S
30	T	30,700	205	209	150	60	60	1S
30	H	30,700	180	180	171	65	65	1S
36	T	36,100	247	245	146	60	60	2S
36	H	36,100	213	214	169	65	65	2S
48	T	48,400	352	352	138	60	60	2S
48	H	48,400	276	274	175	65	65	2S
60	T	61,400	410	418	150	60	60	2S
60	H	61,400	360	360	171	65	65	2S

CRI	CCT	LUMEN PACKAGE OUTPUT	
		T OUTPUT	H OUTPUT
70	5000K	100%	100%
	4000K	100%	100%
80	5000K	95%	98%
	4000K	92%	92%

OPTIC CODE	OPTIC DESCRIPTION	OUTPUT
1G	120° Glass Lens	100%
9G	90° Glass Lens	97%
5G	55° Glass Lens	94%
3G	30° Glass Lens	94%
1C	120° Clear Lens	97%
9C	90° Clear Lens	94%
5C	55° Clear Lens	91%
3C	30° Clear Lens	92%
1D	120° Diffused Lens	94%
1F	120° Teflon Coated Glass	98%
9F	90° Teflon Coated Glass	96%
5F	55° Teflon Coated Glass	94%

ORDERING NOTES:

1. Specify single voltage if plug is needed.
2. Available for single module (1S) configurations only. See Table.
3. Available with 23 (Pendant) Mount Kit only.
4. Not available on 480V.
5. Not available at 347V/480V, Not available on 36K Lumens and up, Not available on "R" finish.

Albeo® LED Luminaires

ARC series | LED IP65 Round High Bay

Mounting/Accessory Options

CUSTOMER NAME

Project Name _____

Date _____ Type _____

Catalog Number _____

FIELD-INSTALLABLE MOUNTING AND ACCESSORY OPTIONS

MOUNTING/ACCESSORY OPTIONS	IMAGE	ORDER LOGIC CODE	DIMENSIONS/NOTES
Standard Chain/Cable Mount Available on all fixture configurations (chain not included). Y-Cable w/ hook can be ordered as an accessory.	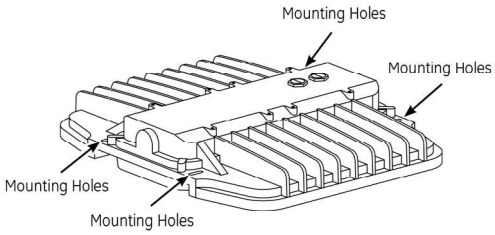	**ST = Standard**	**N/A**
Rod Mount (optional) Available on all fixture configurations. Attaches to 1/2" threaded rod (rod and nuts not included).	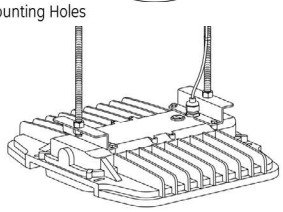	**22 = 1/2" Threaded Rod Kit**	**93132321**
Pendant Mount (optional) Available on all fixture configurations. Attaches to 3/4" NPT threaded conduit (conduit not included).	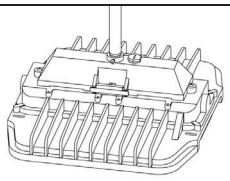	**23 = 3/4" NPT Pendant Mount Kit**	**W Finish: 93132322** **R Finish: 93132323**
Hook/Loop Mount (optional) Available on all fixture configurations. Attaches to loop or hook.	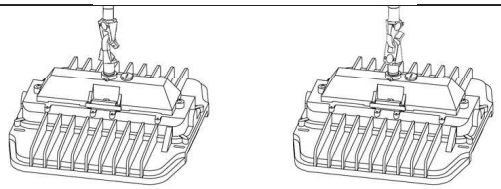	**HK = Hook** **LP = Loop**	**K = 93132319** **LP = 93132320**
Y-Cable w/ hook (optional) Use with Standard Mounting option only. Order separately. Price adder per pair. 5ft. 10ft, 15ft, 20ft lengths available. Not available with corrosion resistant finish (R)	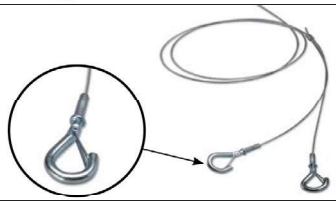	**41 = Y-cable/Hook** **5ft 42 = Y-cable/Hook 10ft** **43 = Y-cable/Hook 15ft** **44 = Y-cable/Hook 20ft** **Max Load: 200 lbs. per pair**	**5ft = 93075756** **10ft = 93075552** **15ft = 93075553** **20ft = 93075554**
Rotatable Mount Bracket (optional) Available on single module (1S) configurations only. Mounts to a wall or ceiling with 360° of rotation at 15° fixed angle points.		**RB = Rotatable Bracket**	**95020514**

Chain/cable mount is standard and included in price. Price adder for Y-Cable, Rod Mount, Pendant Mount, and Rotatable Bracket.
Consult Sales for latest information. See "Installation Instructions" for mounting details.

Albeo® LED Luminaires

ARC series | LED IP65 Round High Bay

Product Dimensions

CUSTOMER NAME

Project Name _____

Date _____ Type _____

Catalog Number _____

1S - MODULE

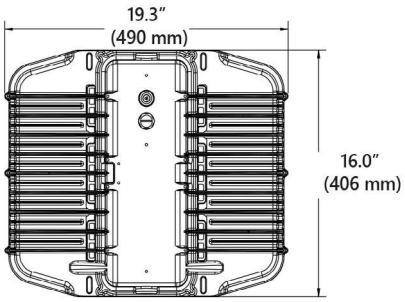

2S - MODULE

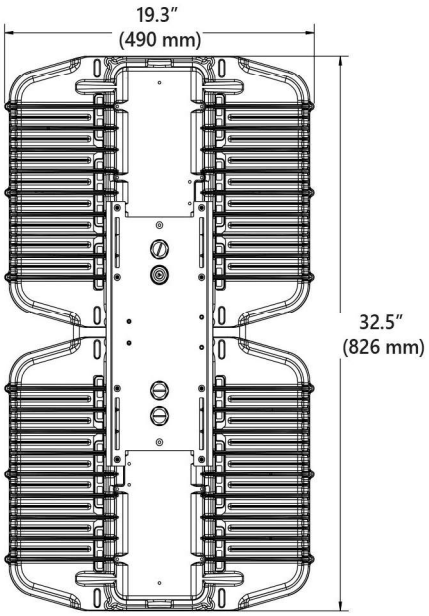

SIDE VIEW

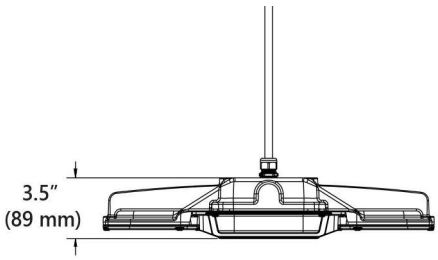

CONFIGURATION	MAX WEIGHT	MAX WEIGHT WITH ROTATABLE BRACKET
Single Fixture 120–277V	21 lbs. max	25 lbs. max
Single Fixture 347/480V	23 lbs. max	27 lbs. max
Double Fixture 120–277V	45 lbs. max	N/A
Double Fixture 347/480V	49 lbs. max	N/A

Albeo® LED Luminaires

ARC series | LED IP65 Round High Bay

Photometric Data

AGENT/DISTRIBUTOR NAME-LOGO

Project Name _____

Date _____ Type _____

Catalog Number _____

PHOTOMETRIC DATA

1G/1C
120° Clear Lens

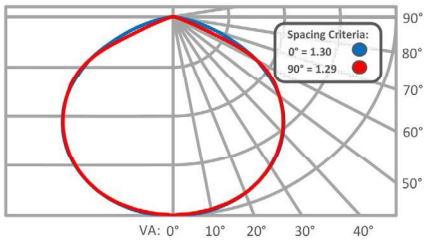

9G/9C
90° Clear Lens

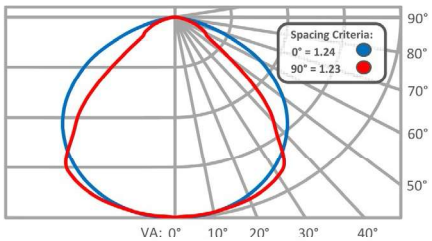

5G/5C
55° Clear Lens

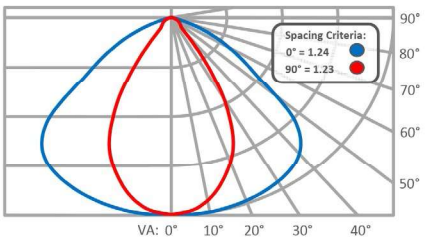

3G/3C
30° Clear Lens

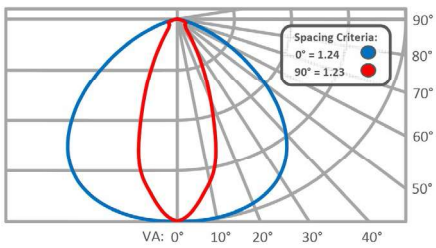

1D
120° Diffused Lens

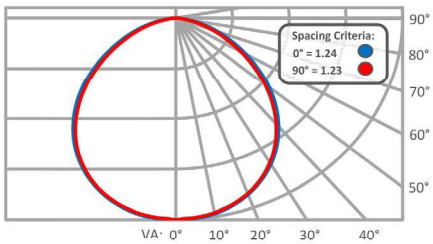

© 2022 Current Lighting Solutions, LLC. All rights reserved. GE and the GE monogram are trademarks of the General Electric Company and are used under license.
Information provided is subject to change without notice. All values are design or typical values when measured under laboratory conditions.