DWG NO. 1000278 SH 1

REVISIONS			
REV	DESCRIPTION	DATE	APPROVED

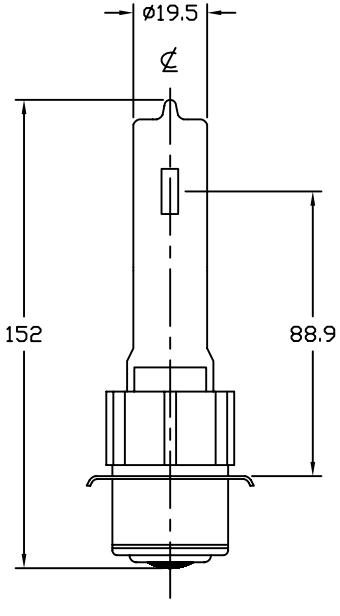

NOTES:

1. ALL DIMENSIONS ARE IN MM.
2. SEAL TEMP: SHOULD BE MAINTAINED BELOW 350°C
3. THE DIMENSIONS AND SPECIFICATIONS OF PRODUCT LISTED IN THIS SHEET ARE SUBJECT TO CHANGE WITHOUT NOTICE FOR IMPROVEMENT.

CHARACTERISTICS	
VOLTAGE	120 V
WATTAGE	1000 W
COLOR TEMP.	3200 K
TOTAL LUMEN	27500 Lm
BASE TYPE	P28S
AVERAGE LIFE	400 HRS
FILAMENT TYPE	CC-8
BURN POSITION	Any

NEXT ASSY	USED ON
APPLICATION	

ITEM	QTY	DESCRIPTION	CODE IDENT	PART NUMBER	REMARKS

LIST OF MATERIALS

UNLESS OTHERWISE SPECIFIED DIMENSIONS ARE IN INCHES
DECIMALS .X ± –
.XX ± –
.XXX ± –
ANGLES ± –
DRILLED HOLES PER AND 10387
REMOVE BURRS AND SHARP EDGES
ALL DIMENSIONS AFTER PLATING

MATERIAL
COMPOSITE

FINISH

CONTRACT NO.

APPROVALS		DATE
DRAWN	R.AMPARO	09/01/99
CHKD	D.GILCZYNSKI	09/01/99
ENGR		
MFG		
QUAL		
DSGN ACTVY		
GOVT ACTVY		

USHIO AMERICA, INC.
5440 Cerritos Avenue Cypress, CA 90630

TITLE
EGJ
JCV120V–1000WC

SIZE	CODE IDENT NO.	DWG NO.
B	EGJ	1000278

SCALE	WEIGHT	SHEET
NONE		1 OF 1

CAD