HATCH

Compact Fluorescent Electronic Ballast Kit

SMART KIT™

For Quick & Easy Ballast Replacement

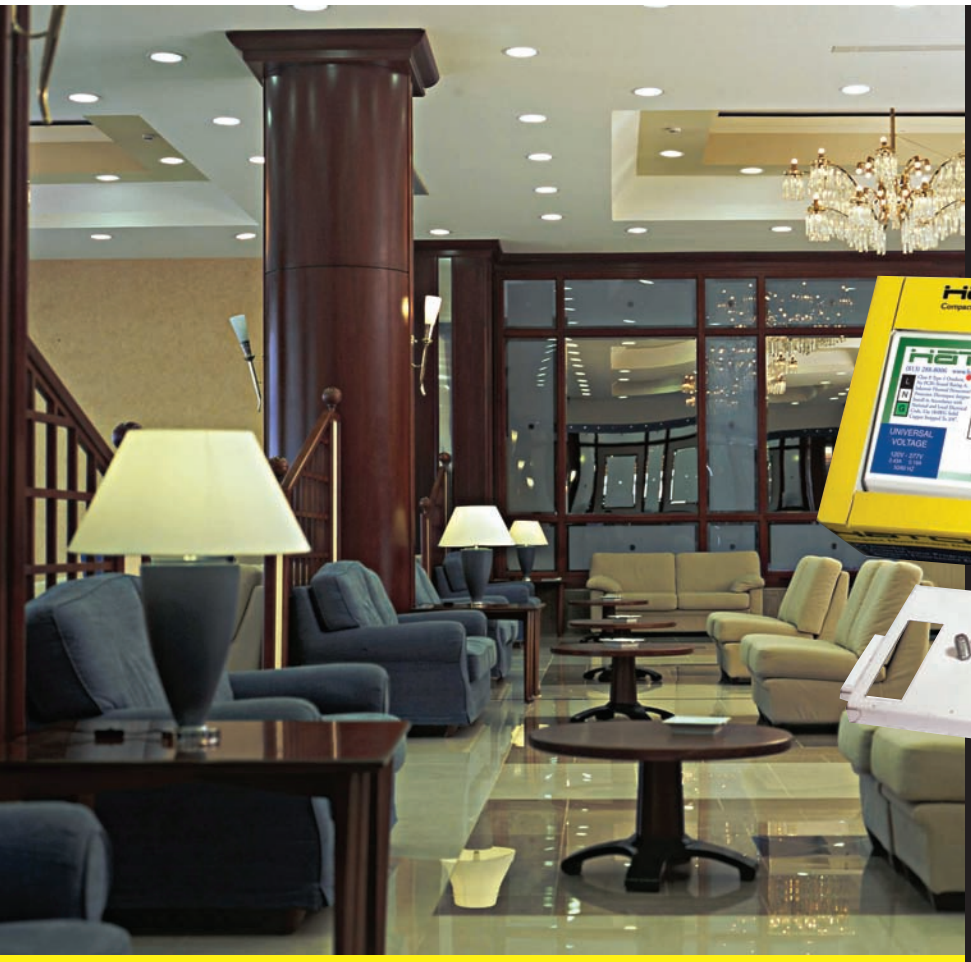

High Power Factor Energy Saving Ballasts

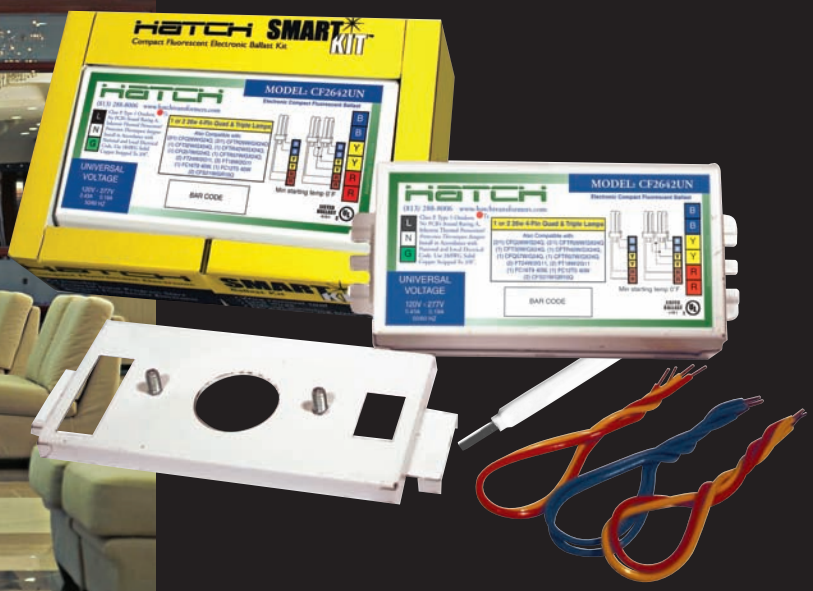

Use Hatch Compact Fluorescent Smart Kit ™ replacement ballasts for 13 through 42W lamps when replacing lighting fixture ballasts. They are easy to install and energy efficient.

Hatch Program Start ballasts are designed to provide maximum lamp life.

Designed for use with Junction Box and all fixture mounting applications.

- Bottom Feed
- Side Lead
- Bottom Feed w/stud mounting plate
- Bottom Center Feed w/stud mounting plate

Multiple Wiring & Mounting Applications

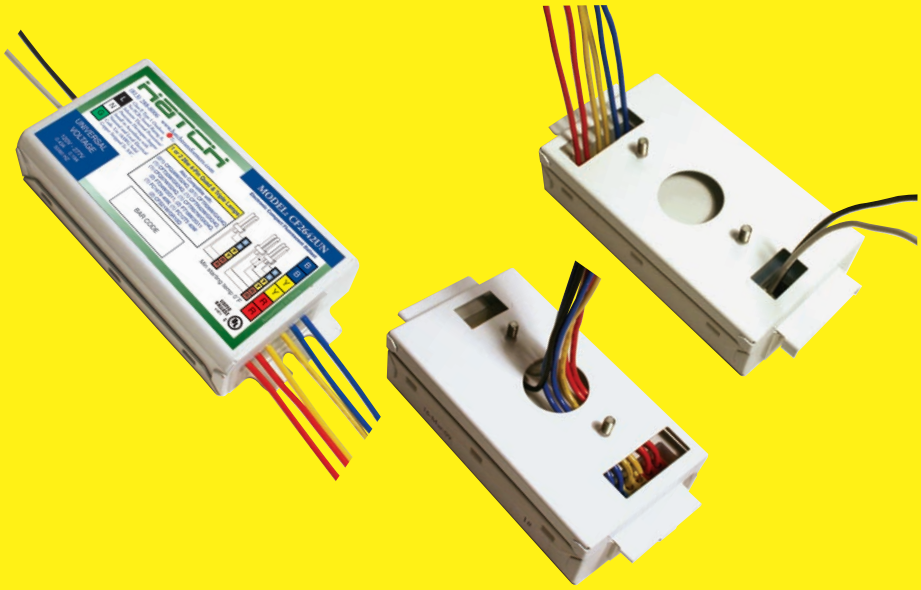

HATCH

HATCH SMART KIT™

Compact Fluorescent Electronic Ballast Kit

For Quick & Easy Ballast Replacement

Ballast Cross Reference Guide

Hatch Smart Kit	Universal	Advance	Osram	Robertson	GE	Keystone
HC213PS/UV/K	C213UNVSE000K/BE/BES	ICF-2S13-H1-LD	QTP 1/2x13CF/UNV	PSM213CQMV	GEC213-MVPS-SE GEC213-MVPS-BES	KTEB-213-UV-TP-PSD
HC218PS/UV/K	C218UNVSE/BE/BES	ICF-2S18-H1-LD REL-2Q18 VEL-2Q18 R-2Q18-4P-TP V-2Q18-4P-TP	QTP 1/2x18CF/UNV	PSM218CQMV	GEC218-MVPS-SE GEC218-MVPS-BES	KTEB-218-UV-TP-PSD
HC226PS/UV/K	C2642UNVSE/BE/BES C132SR120BE C132SR277BE C226SR120BE C226SR277BE	ICF-2S26-H1-LD REL-1T32 VEL-1T32 REL-1T42 VEL-1T42	QTP 1x26/32/42CF/UNV QTP 2x26/UNV QTP 1/2xCF/UNV	PSM226CQMV	GEC226-MVPS-SE GEC226-MVPS-BES	KTEB-226-UV-TP-PSD
HC242PS/UV/K	C242UNV BE/SE/BES	ICF-2S42-M2-BS ICF-2S42-MS-LD ICF-2S42-MS-LS		PSP242T-RMVW PSP242T-RMVDW PSP242T-RMVDSW	C242UNVSE C242UNVBES GEC242MVPS-BES GEC242MVPS-SE	KTEB-242T-UV-TP-PSD

HATCH *Features*

- Electronic Universal CFL Ballasts
- Program Start Ballast - For longer lamp life.
- Maximum case temperature of 90˚ C which is beneficial when used in recessed fixture applications.
- Keeps mounting simple with bottom and side push in connectors. Includes all materials required (ballast, adapter plate, wires & wire removal tool).
- Senses if the lamp is about to fail, then automatically powers down so there is no damage to the lamp or system.
- Made for institutional, commercial, office, retail and residential applications.
- Color coded push-in connectors.
- Designed to meet the most demanding power requirements and applications.
- Low profile case.
- Use single ballast for one or two lamp applications.
- THD is less than 10% in most applications.

No Additional Hardware Required

Slide on stud mount plates are included with the SMART KIT™

Stud Mounting Plate

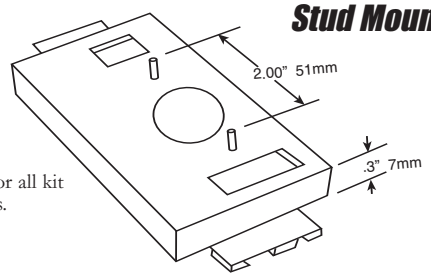

Note: Typical for all kit mounting plates.

13, 18 & 26 Watt Dimensions

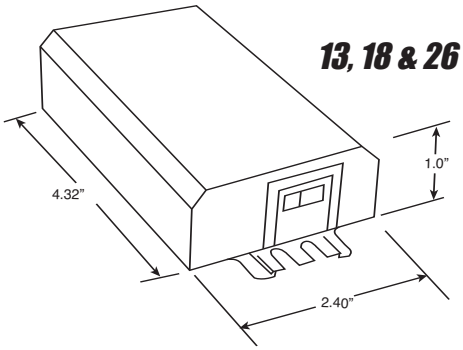

42 Watt Dimensions

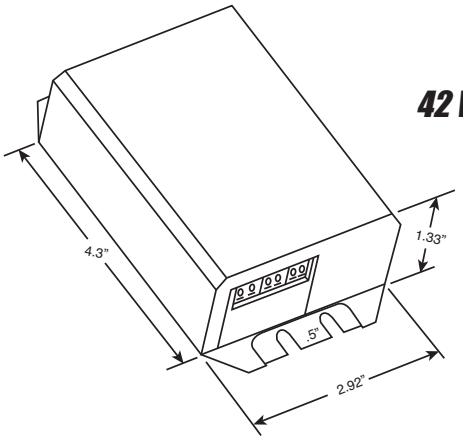

HATCH
7821 Woodland Center Blvd. • Tampa, FL 33614
Phone 813.288.8006 • fax 813.288.8105 • www.HatchLighting.com