20-5102 C

REVISIONS		
REV	DESCRIPTION	DATE
C0	CHANGED PER ECN 15-022	09/11/2015
B1	CHANGED PER ECN ES 2015011401	01/19/2015
B0	CHANGED PER ECN 14-014, 14-015, 14-020 AND 14-021	11/03/2014
A0	RELEASE TO PRODUCTION	05/25/2014

SAFETY

SAFETY STANDARDS COMPLIANCE:
UL8750
UL1310

LVD EN61347-2-13
EMI STANDARDS:
FCC 47 CFR PART 15 CLASS B
CE EN55015, EN61547
EN61000-4-2,3,4,5,6,8,11

SAFETY CERTIFICATIONS
UL, cUL E357847
LVD EFSN14081229E-L
EMC dir EFSN14081229E-E
FCC pending

INPUT

INPUT RANGE:
110~277 VAC, 340~130mA
@ FULL LOAD.

FREQUENCY: 50/60 Hz.

EFFICIENCY: 87 % Typ.

PEAK INRUSH:
24 AMPS @ 110V AC

DIMMING:
AC Phase - Trailing edge only

POWER FACTOR: >0.98

LEAKAGE CURRENT:
< 0.01mA @277VAC
Surge Immunity: 2.5 KVac

OUTPUT

STANDARD LOAD RANGE:

OUTPUT	MIN	MAX	LOAD REG	MAX. RIP
1000mA	19V	30V	±5%	2.4%

MISCELLANEOUS

COOLING: CONVECTION

NOISE LEVEL: <24 dB (Doc 149600329)

RELIABILITY (MTBF): (MIL-HDBK-217E)
100,000 HRS. @ 25 DEG. C @ FULL LOAD

ENVIRONMENTAL CONDITIONS:
OPERATING TEMPERATURE: -30 ~ 50°C
RELATIVE HUMIDITY: 5 ~ 95%
LOCATION: For Dry and Damp Use Only

CONNECTOR:
N/A

PROTECTION:
OCP,SCP,OPP
AUTO-RECOVERY

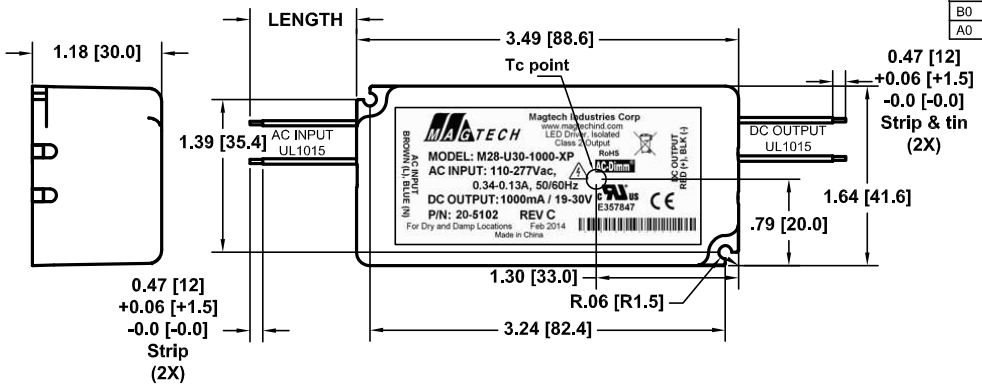

CON	PIN	COLOR	OUTPUT	AWG	LENGTH
AC IN	---	BROWN	LINE	18	6.5 [165] ± 0.5 [± 13]
	---	BLUE	NEUTRAL	18	
DC OUT	---	RED	+V	20	
	---	BLACK	GND	20	

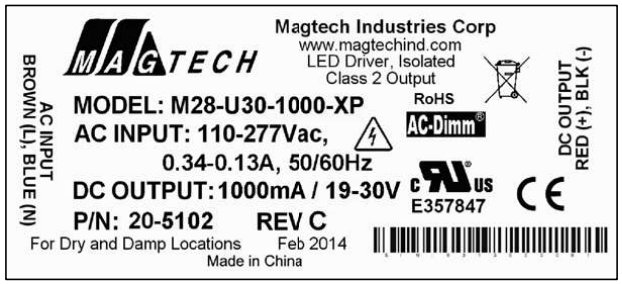

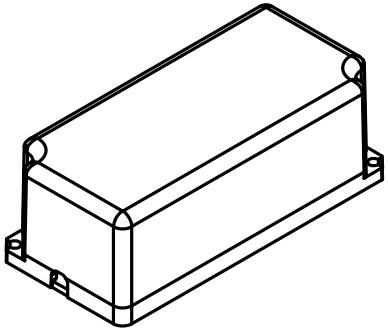

Notes:
1.- Magtech provides 3 years warranty (standard)
2.- Bar code defined by drawing 77-0120.
3.- Transformer - Class 130 (B), Insulation system

MANUFACTURED BY:

THIS ITEM IS THE PROPERTY OF MAGTECH INDUSTRIES AND CONTAINS PROPRIETARY CONFIDENTIAL AND TRADE SECRET INFORMATION. THE INFORMATION CONTAINED HEREIN MUST NOT BE USED, DISCLOSED OR REPRODUCED IN WHOLE OR IN PART WITHOUT PRIOR WRITTEN CONSENT FROM MAGTECH IND.

UNLESS OTHERWISE SPECIFIED
DIMENSIONS IN INCHES [MM]
TOLERANCES:
.X DECIMALS± .05 [1,3]
.XX DECIMALS± .02 [0,5]
.XXX DECIMALS± .005 [0.13]
ANGLES± 1°
FRACTIONS± 1/16
DO NOT SCALE THIS DRAWING
INTERPRET DRAWING PER ANSI Y14.5M

QC:

TITLE: M28-U30-1000-XP, 110~277VAC, 1000mA, 19~30V

APPROVAL DATE: 05/05/2014	MODEL NO.	DWG NO.	REV.	SH OF
EFFECTIVE DATE: 05/05/2014	M28-U30-1000-XP	M20-5102	C0	1 1

205102C0M1.DWG

FORM PF-0004